HVAC – Overview

LIEBHERR

Content

LIEBHERR

Overview

- **Air conditioning unit**
  1. Saloon compact unit
  2. Cab compact unit
  3. Saloon split unit
- **Duct system**
- **Heaters**
  - Return air heater
  - Duct heaters
  - Side wall heaters
  - Floor heaters
- **Exhaust air units**
- **Pressure protection systems**
- **Sensors**

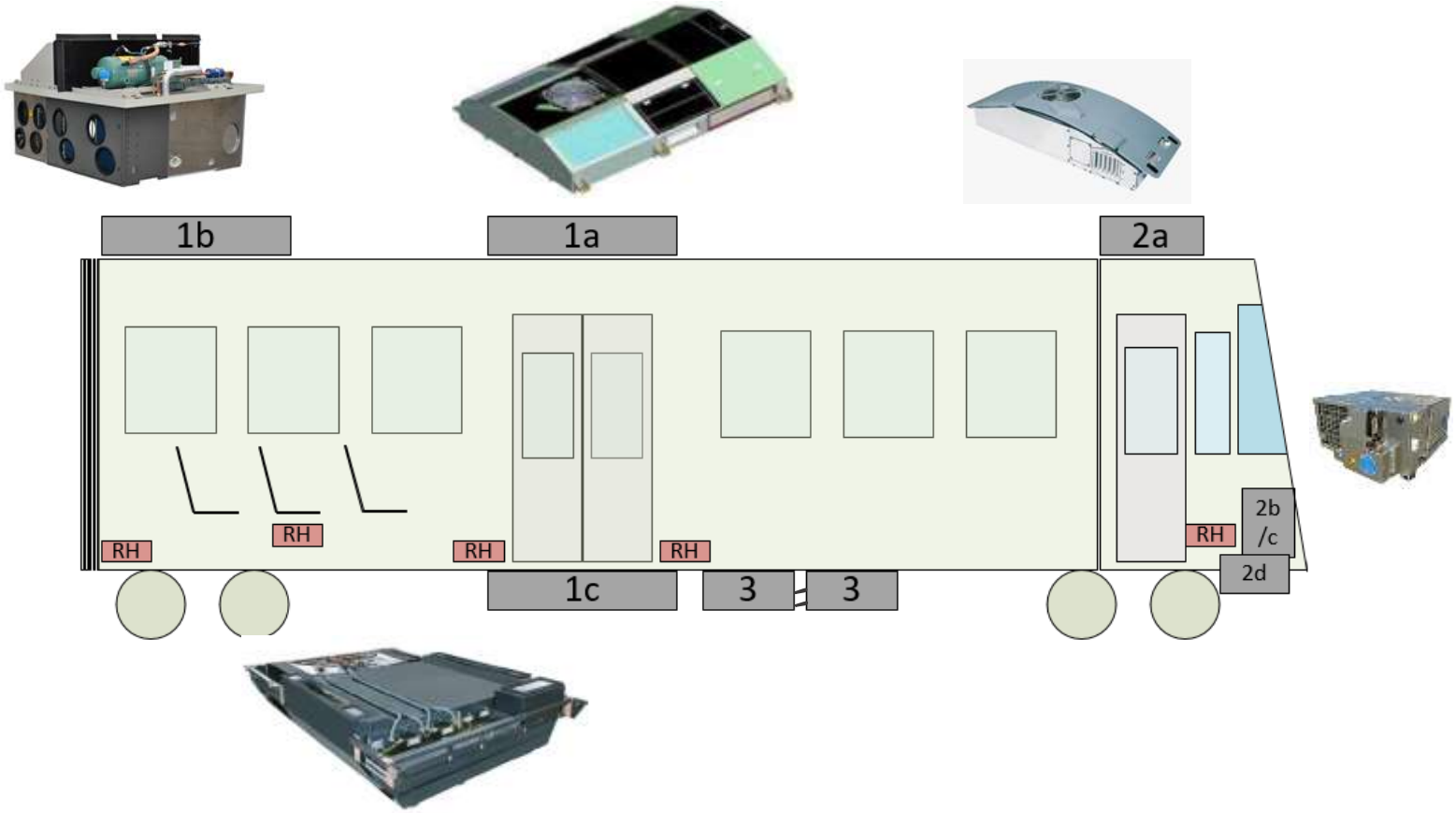

LIEBHERR

Needs for cooling / heating calculation

- **Specification of customer**
  - Design point / Definition of climatic zones
    - outside conditions
    - inside conditions
  - Parameter of the train
    - surfaces of wall and windows
    - k-values walls, g-factor windows
  - Internal heat sources (e.g lightning, electrical box)
  - Number of passengers
- **Standards**
  - EN 14750-1, EN 13129-1, EN 14813-1

Calculation / heat loads

- **Heat loads into car**

- **Result**
  - Cooling capacity
  - Heating capacity
  - Amount of supply air

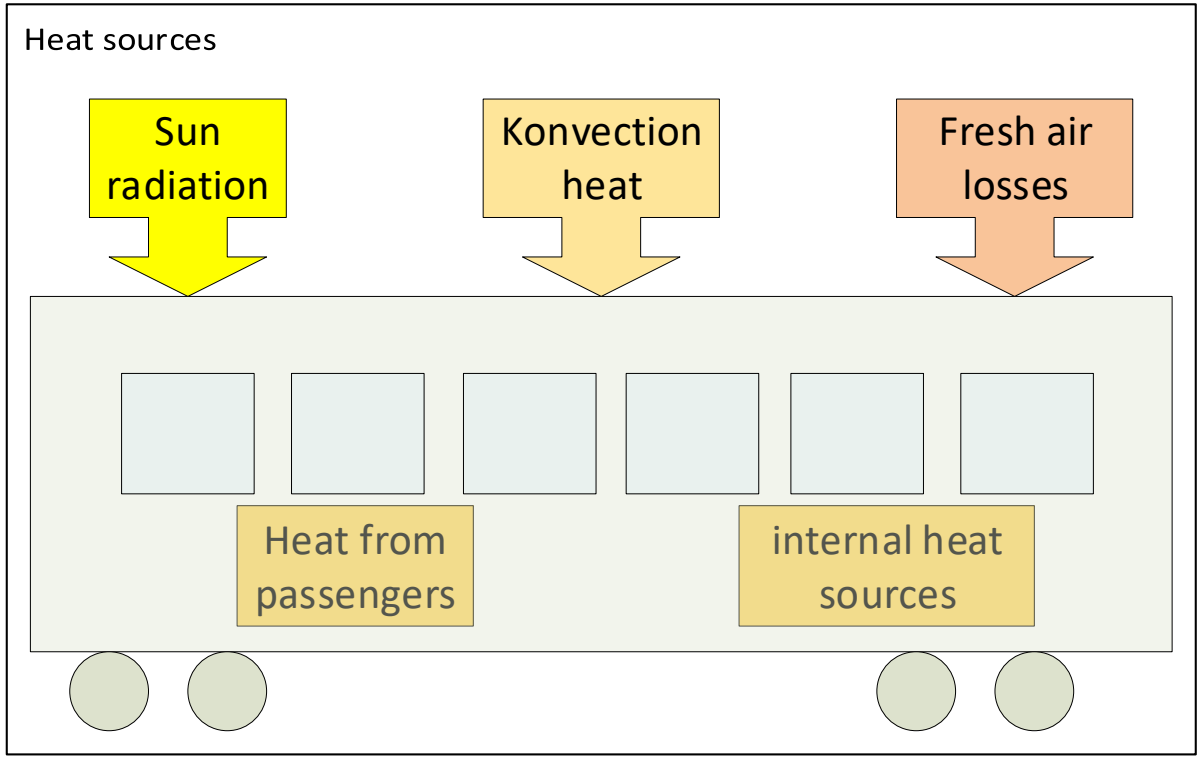

LIEBHERR

Ducting

- **Energy transfer**
  - Cooling from ceiling
  - Heating from bottom area
  - Convection heaters or ducts

- **Ducts**
  - Distribution of supply air
  - Temperature distribution
  - Return air
  - Exhaust air

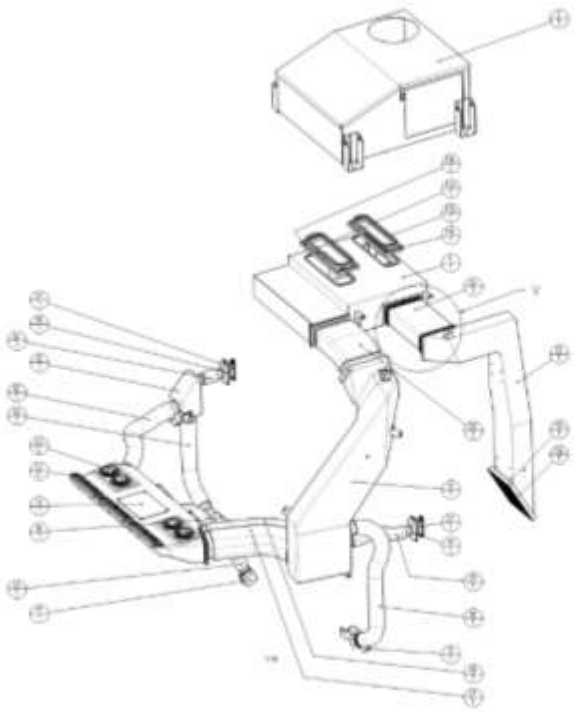

LIEBHERR

Ducting

- **Example from Talent 2**

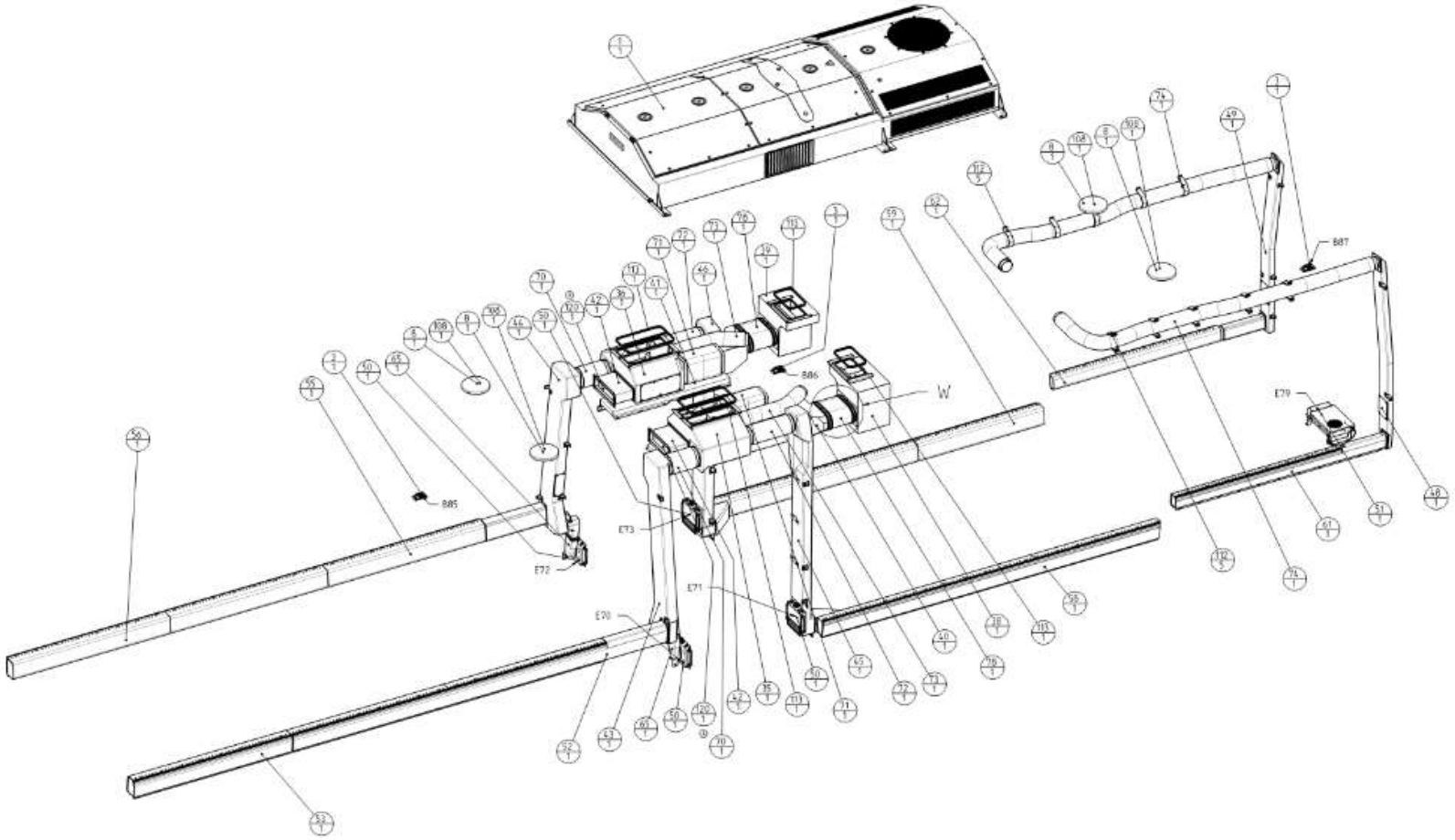

LIEBHERR

Operating conditions

- **Conditions:**
  - Cooling / heating / ventilating
  - Pre-cooling
  - Pre-heating
  - Free cooling
  - Emergency
  - Dehumidification
  - Stand by / pre conditioning

LIEBHERR

Actual situation on refrigerants

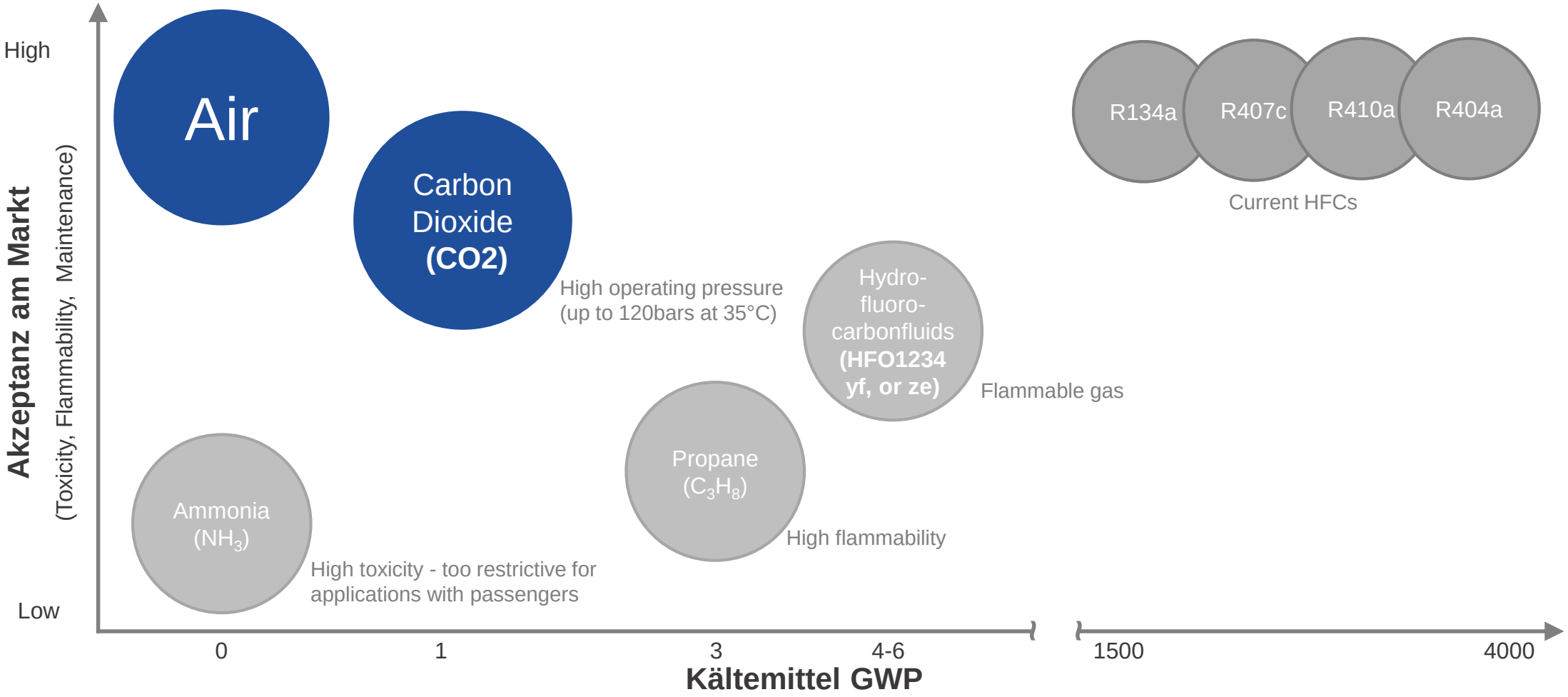

LIEBHERR

Working principals

R134a: subcritical process

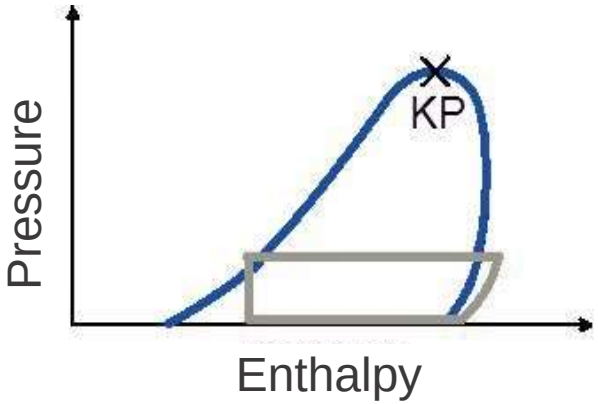

- pressure range:
  - 1 - 25 bar
  - typical pressure ratio 4…10
- heat release: condenser at constant temperature
- piping: large diameters

CO_2: transcritical process

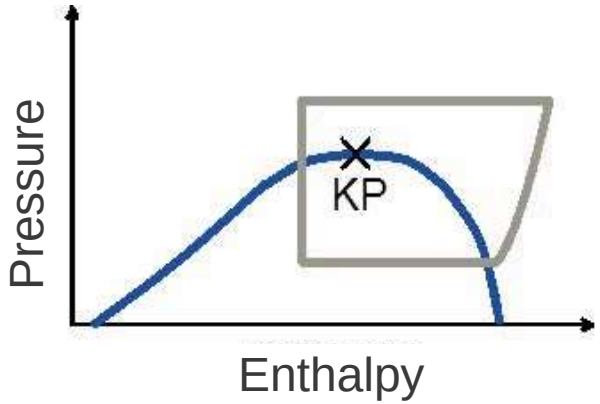

- pressure range:
  - 25 - 130 bar
  - typical pressure ratio 2…5
- heat release: gas cooler at sliding temperature
- piping: small diameters

Working principals

- **Cooling schematics**
  Talent 3 ÖBB

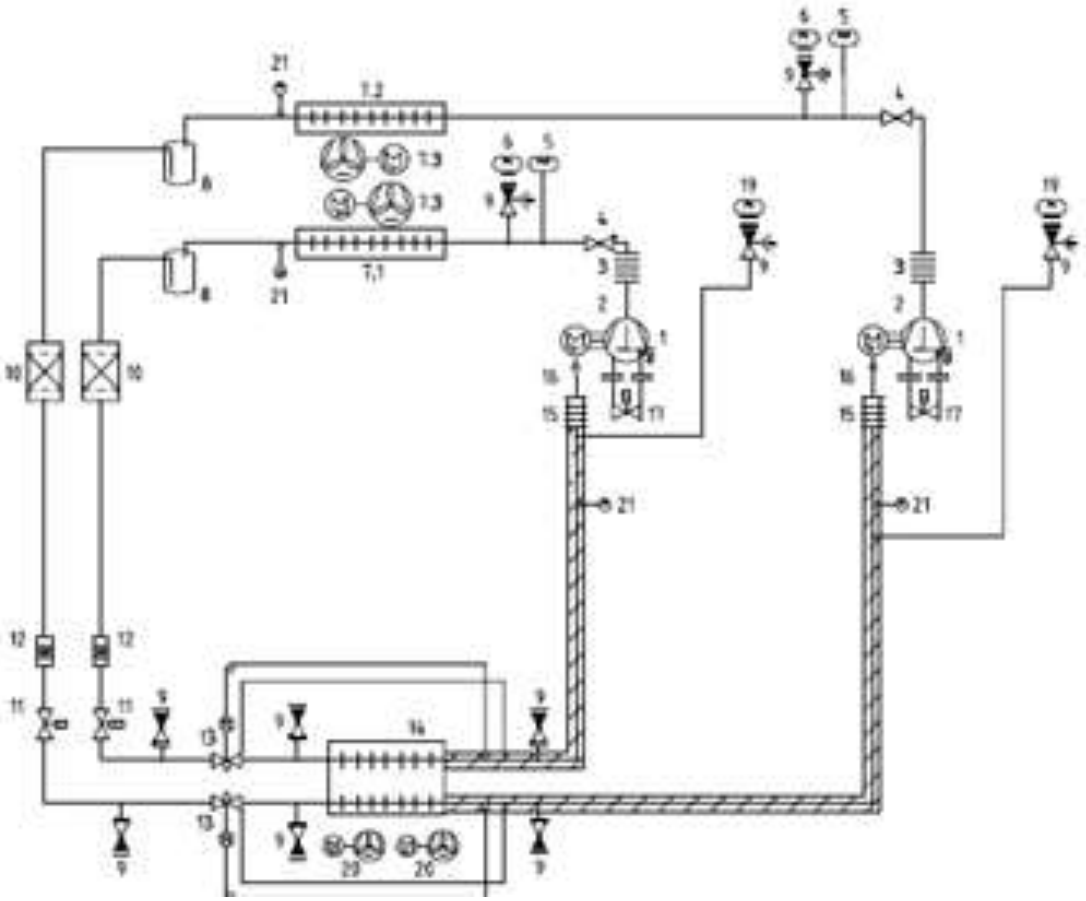

Pos.	Name	Anzahl
1	Verdichter	2
2	Lötadapter Druckseite	1
3	Rohrleitungskompensator	2
4	Rückschlagventil	2
5	Druckwächter HP	2
6	Drucksensor HP	2
7.1	Verflüssiger	1
7.2	Verflüssiger	1
7.3	Verflüssiger Lüfter	2
8	Sammler	2
9	Servicevenil	10
10	Filtertrockner	2
11	Magnetventil	2
12	Schauglas	2
13	Expansionsventil	2
14	Verdampfer	1
15	Rohrleitungskompensator	2
16	Lötadapter Saugseite	1
17	Magnetventil Leistungsregelung	2
18	Druckwächter LP	9
19	Drucksensor LP	2
20	Zulüfter	2
21	Temperatursensor	4

LIEBHERR

Working principals

- **Cooling schematics CO2-unit**

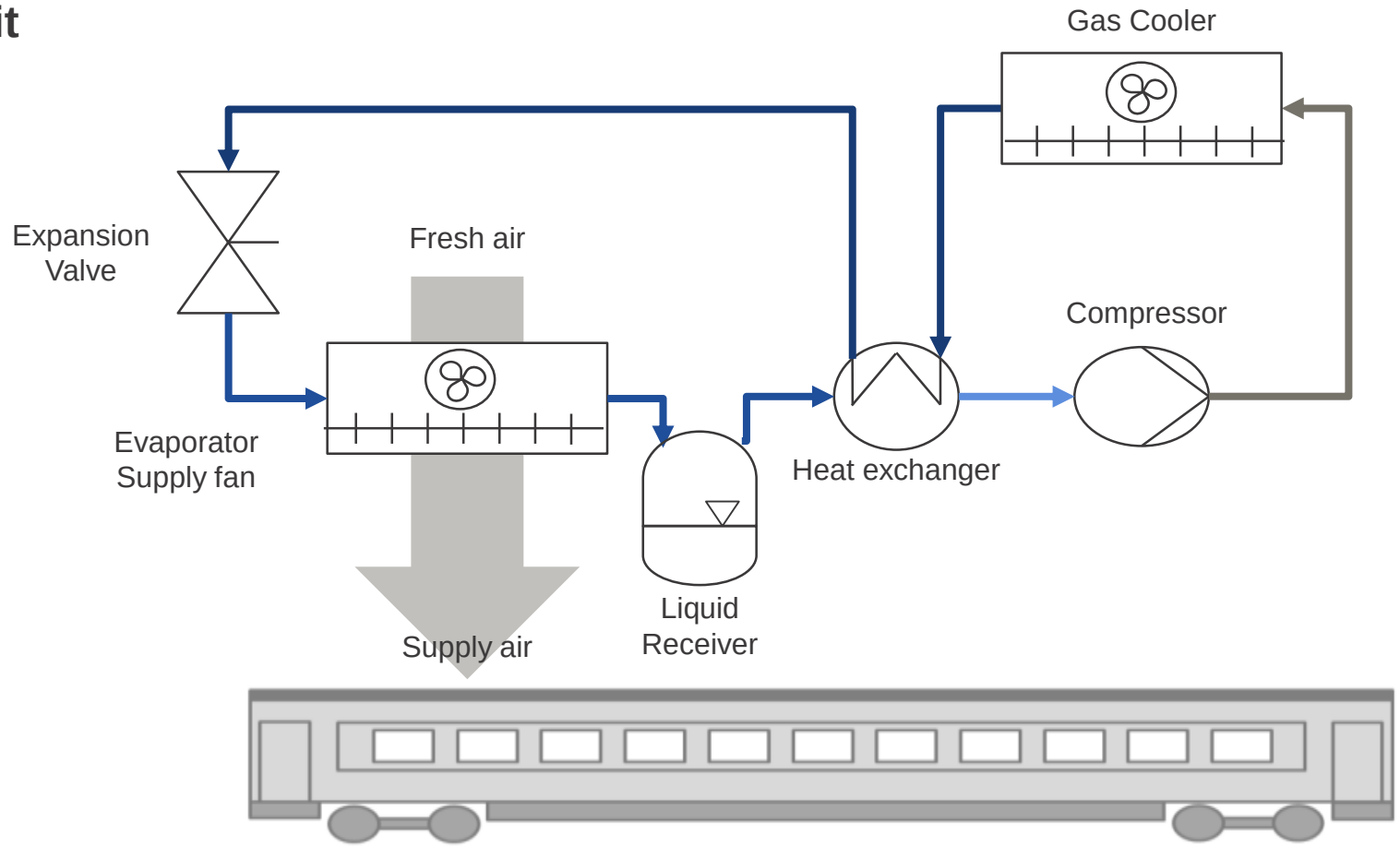

LIEBHERR

Architecture example

- **Talent 2**
- **Talent 3 ÖBB saloon unit**

General Technical Data

supply air volume		cooling 2,900 m³/h
		heating 2,200 m³/h
refrigerant		R134a
cooling capacity		27 kW
heating capacity		30 kW
supply air fan		2 x radial
condenser air fan		1 x axial
compressor		1 x screw
weight		775 kg
dimensions	width	2,070 mm
	length	4,190 mm
	height	591 mm

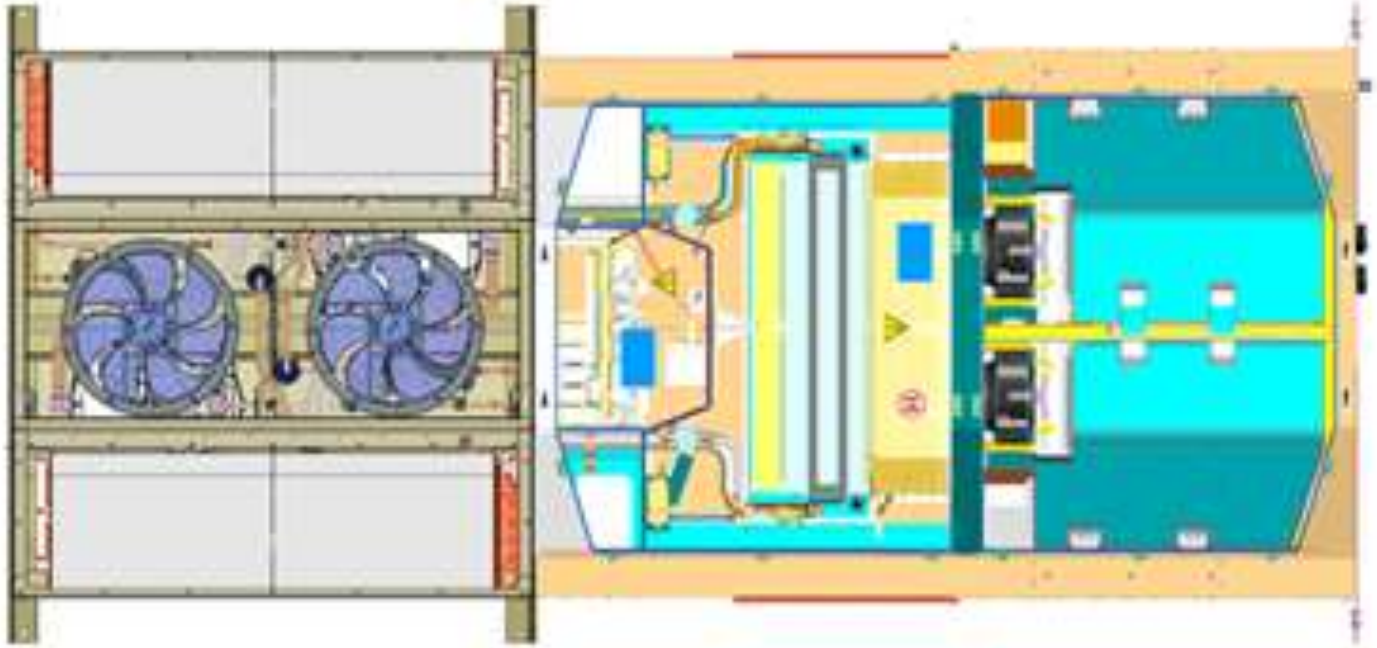

Cooling part **air handling part** **silencer**

LIEBHERR

Architecture example

- **Talent 3 ÖBB cab unit**

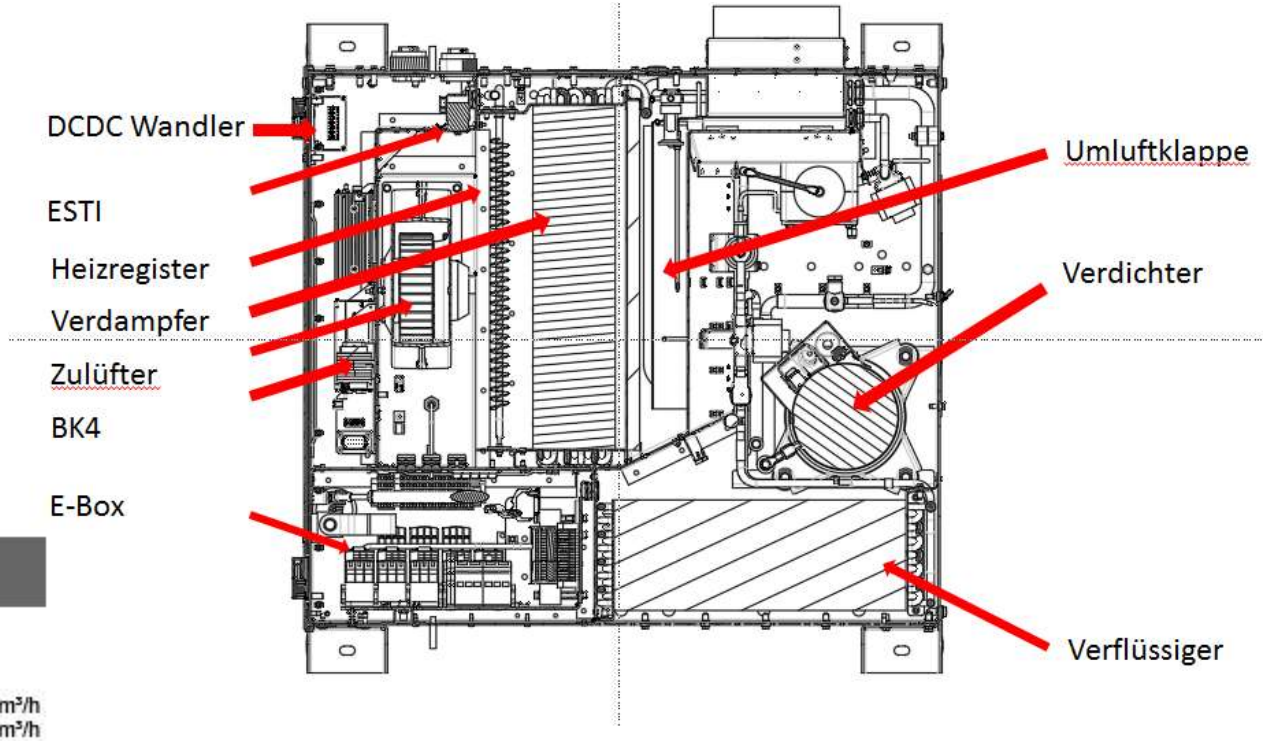

Technical Information

General Technical Data

supply air volume		cooling 550 m³/h heating 550 m³/h
refrigerant		R134a
cooling capacity		4,5 kW
heating capacity		5,4 kW
supply air fan		1 x radial
condenser air fan		1 x axial
compressor		1 x scroll
weight		182 kg
dimensions	width	1,020 mm
	length	1,013 mm
	height	495 mm

LIEBHERR

Architecture example

- **Thameslink saloon unit**

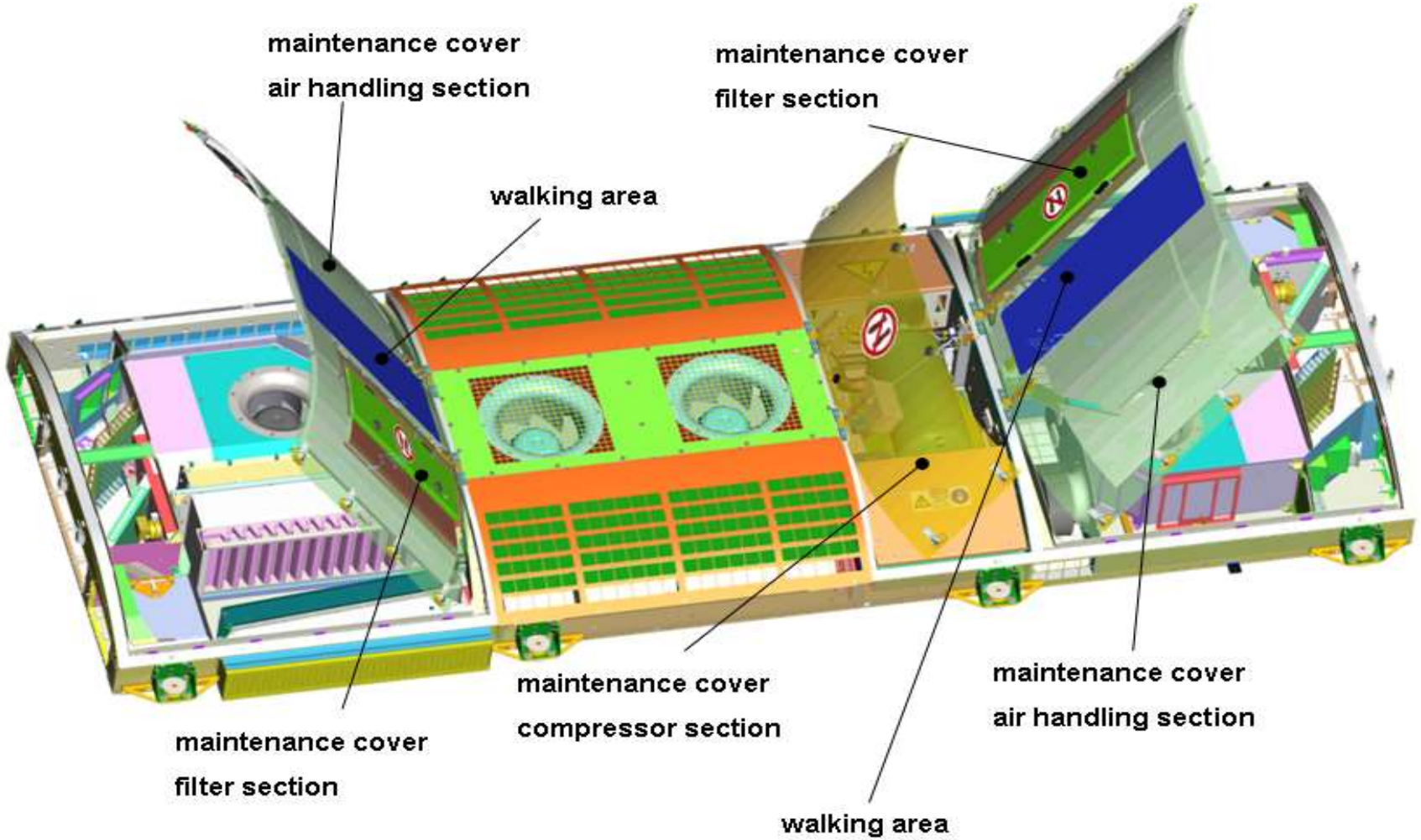

LIEBHERR

Architecture example

- **Thameslink cab unit**

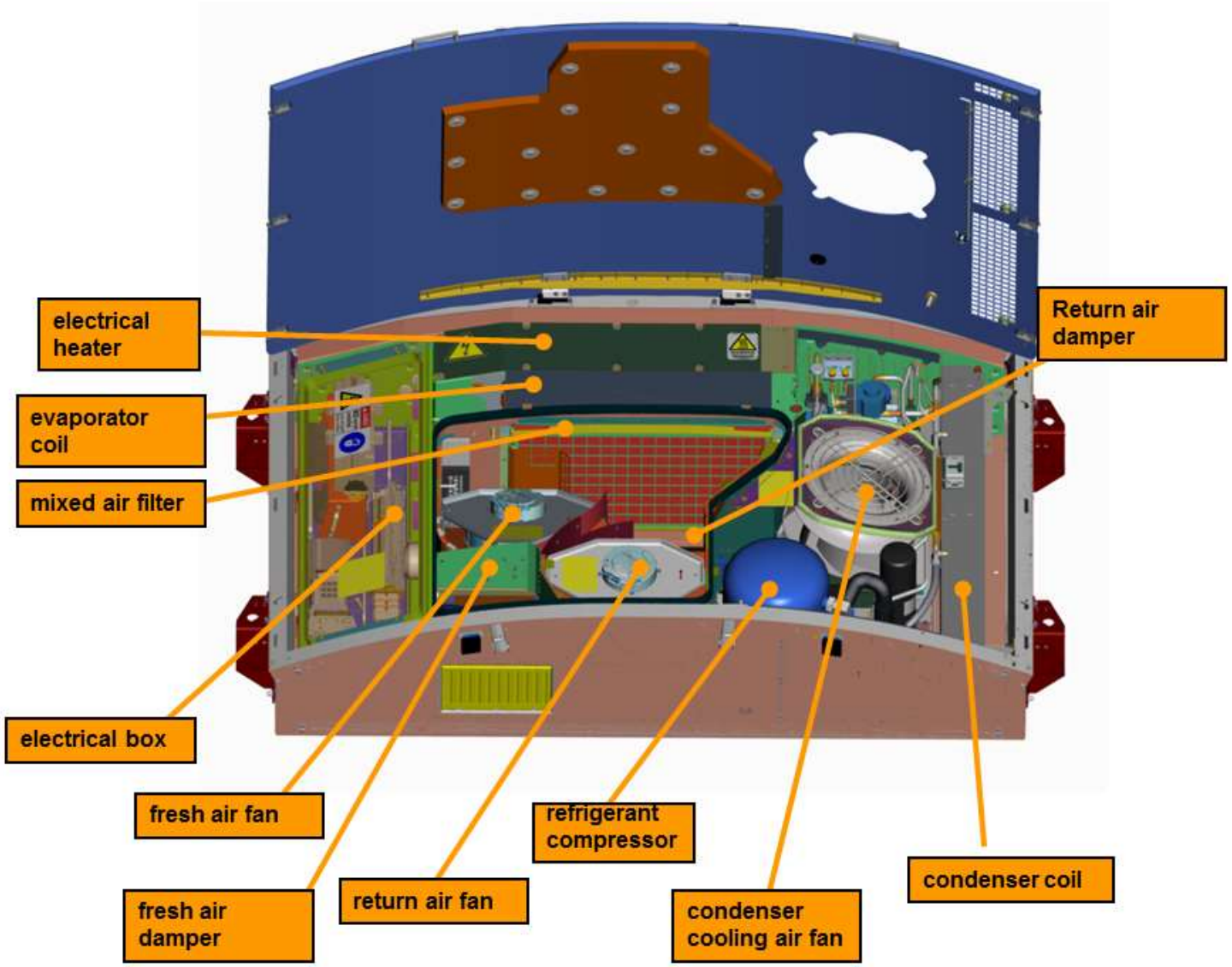

LIEBHERR

Operating principals - Air Cycle Reverse Loop Architecture

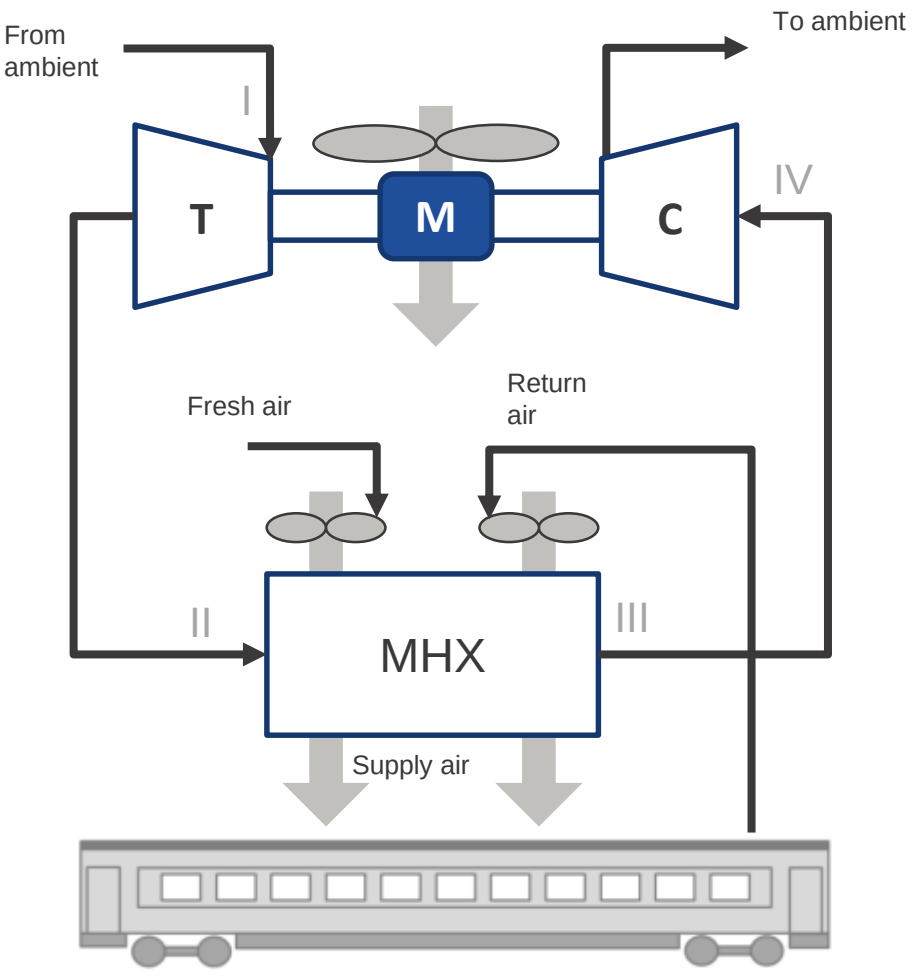

- Basic principle:
  - I-II: Expansion of the ambient air flow (turbine stage)
  - II- III: Decrease of the temperature (heat transfer)
  - III-IV: Compression to ambient pressure (compressor stage)
  - IV: Hot air streams into atmosphere, “cools” down to ambient temperature
- Refrigerant: ambient air (R729)

Entropic Diagram

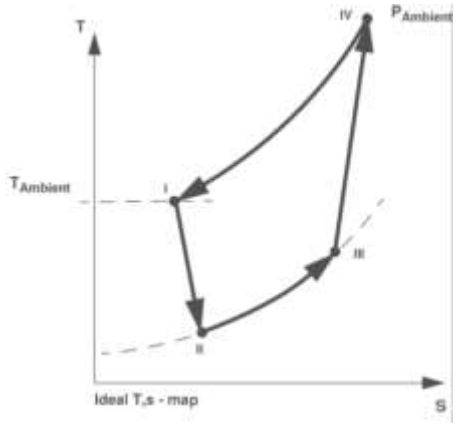

MHX : Main Heat Exchanger
T : Turbine stage
C : Centrifugal compressor stage
M : Synchronous motor

ICE 3

- High speed train of DB with maximum speed of 330km/h

2004

Liebherr equipped 13 trainsets of ICE 3.2

2015

Liebherr equipped 1st train of ICE 3.1

2016

Liebherr equipped 2nd train of ICE 3.1

Operating principals - Air Cycle Next Generation

MHX: Main Heat Exchanger

C: Centrifugal compressor stage

M: Synchronous motor

T: Turbine stage

CND: Condenser (HX)

REH: Re-Heater (HX)

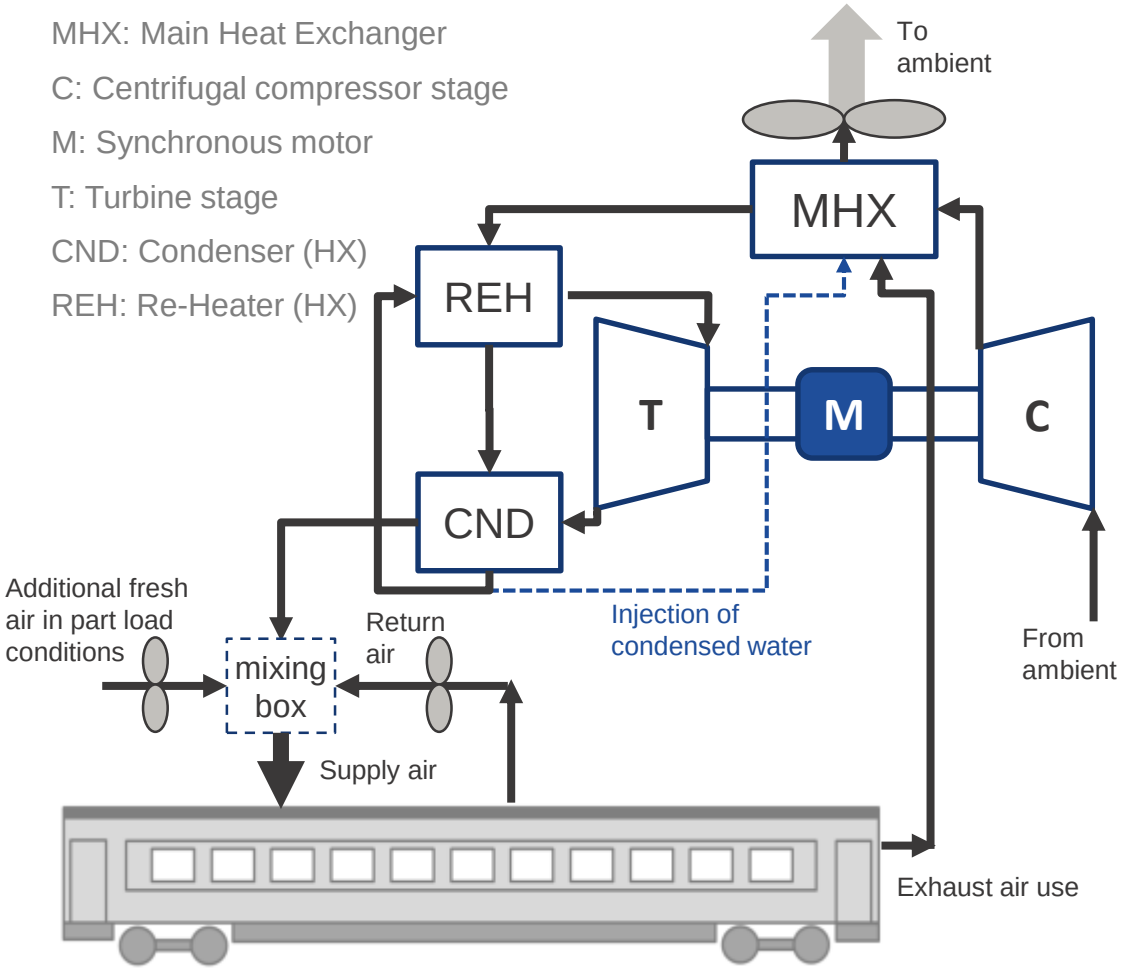

- Two additional heat exchangers (REH, CND)
  - Generate practically conditions for water extraction from process air flow (CND)
  - Improve energy efficiency with re-heating process air flow before expansion (REH)

FINAL ARCHITECTURE

Operating principals - Air Cycle Next Generation

MHX: Main Heat Exchanger

C: Centrifugal compressor stage

M: Synchronous motor

T: Turbine stage

CND: Condenser (HX)

REH: Re-Heater (HX)

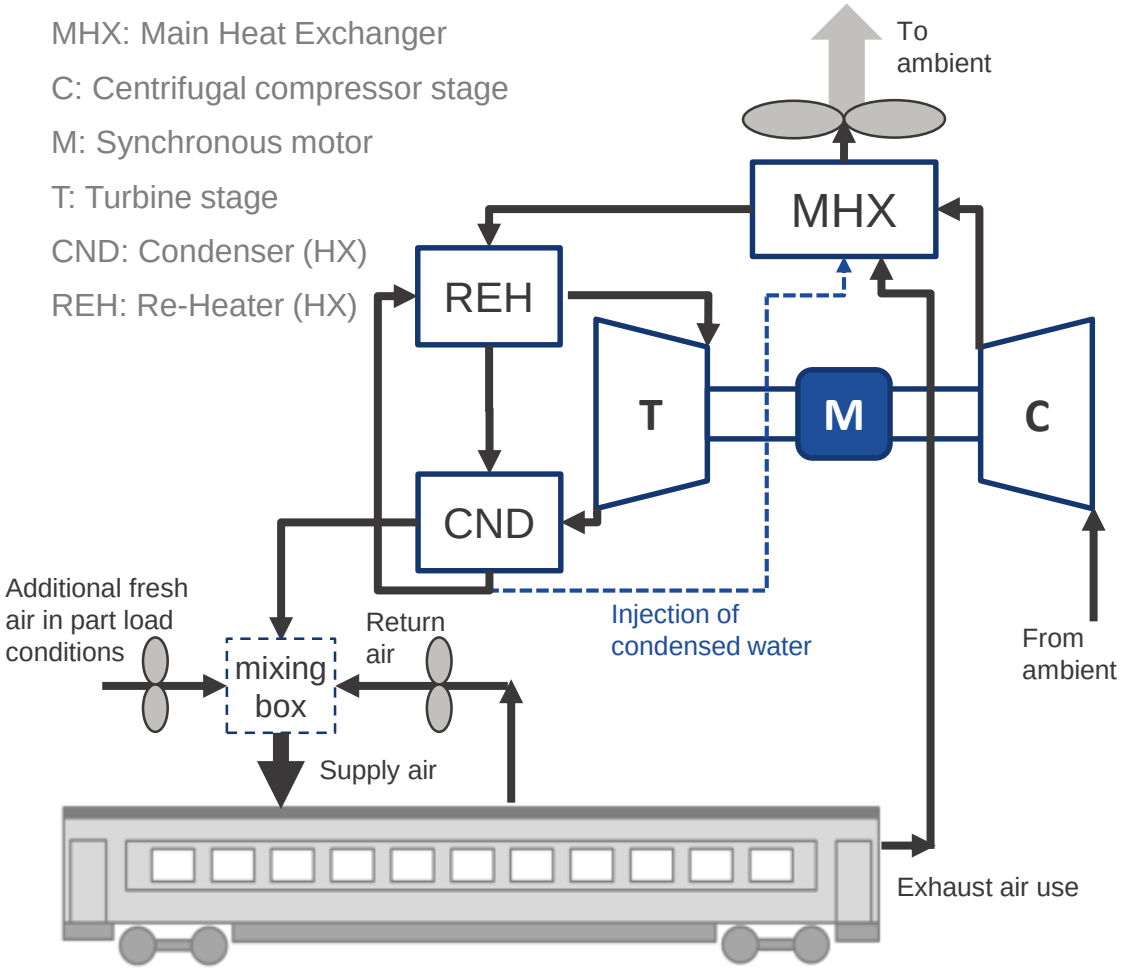

- Two additional heat exchangers (REH, CND)
  - Generate practically conditions for water extraction from process air flow (CND)
  - Improve energy efficiency with re-heating process air flow before expansion (REH)

FINAL ARCHITECTURE

Experience the Progress.

Copyright